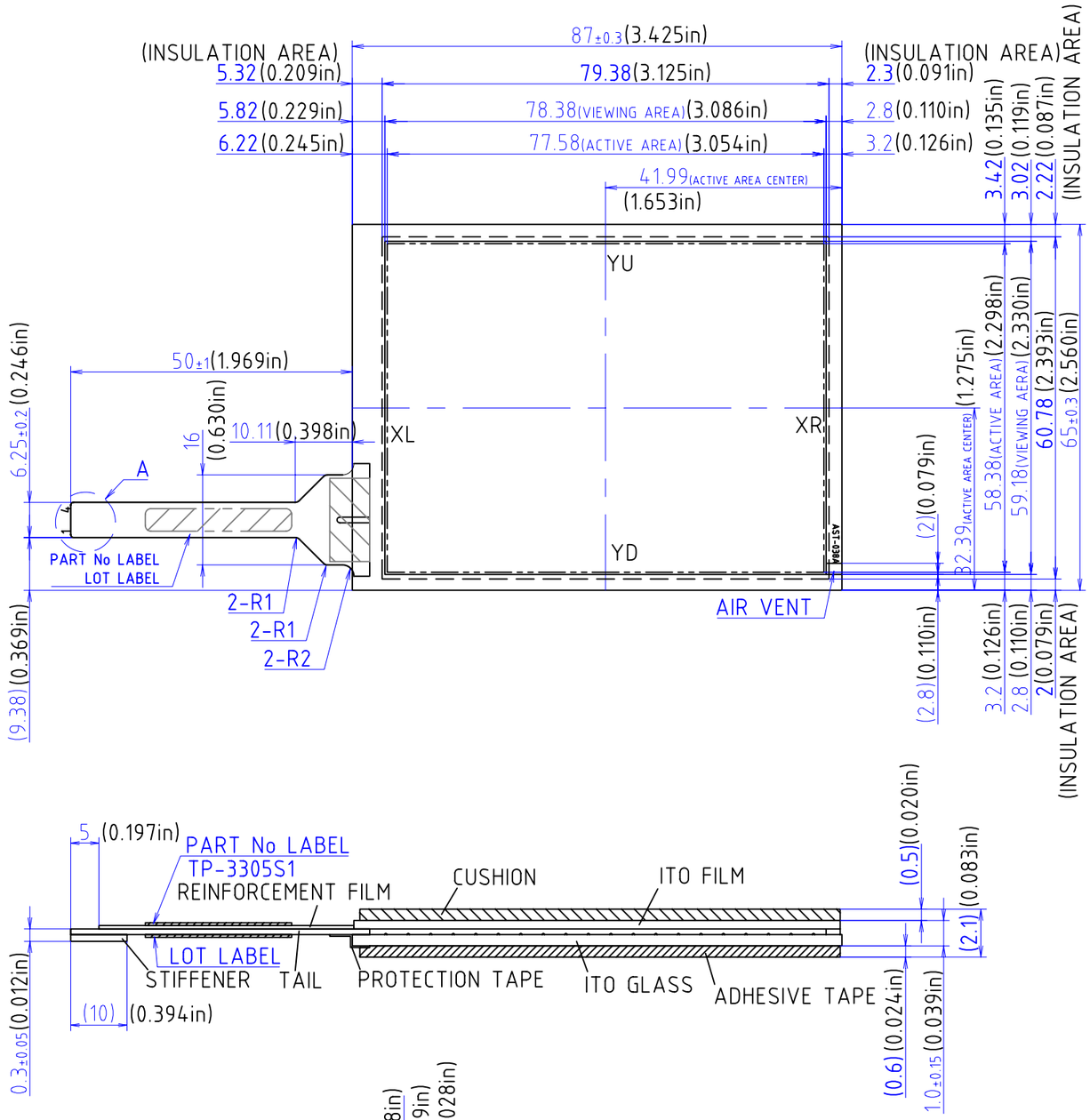

PIN ASSIGNMENT

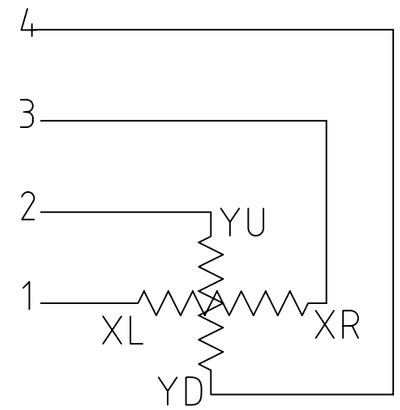

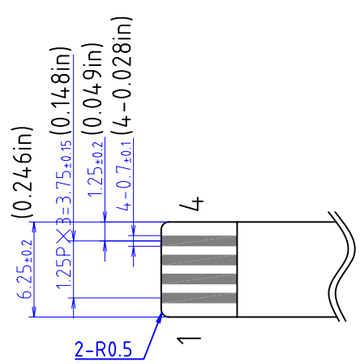

SECTION A

PART No.	DATE
TP-3305S1F0	Mar 4, 2008
TYPE STANDARD TOUCHSCREEN DIMENSIONAL DRAWING	DMC Co., Ltd.