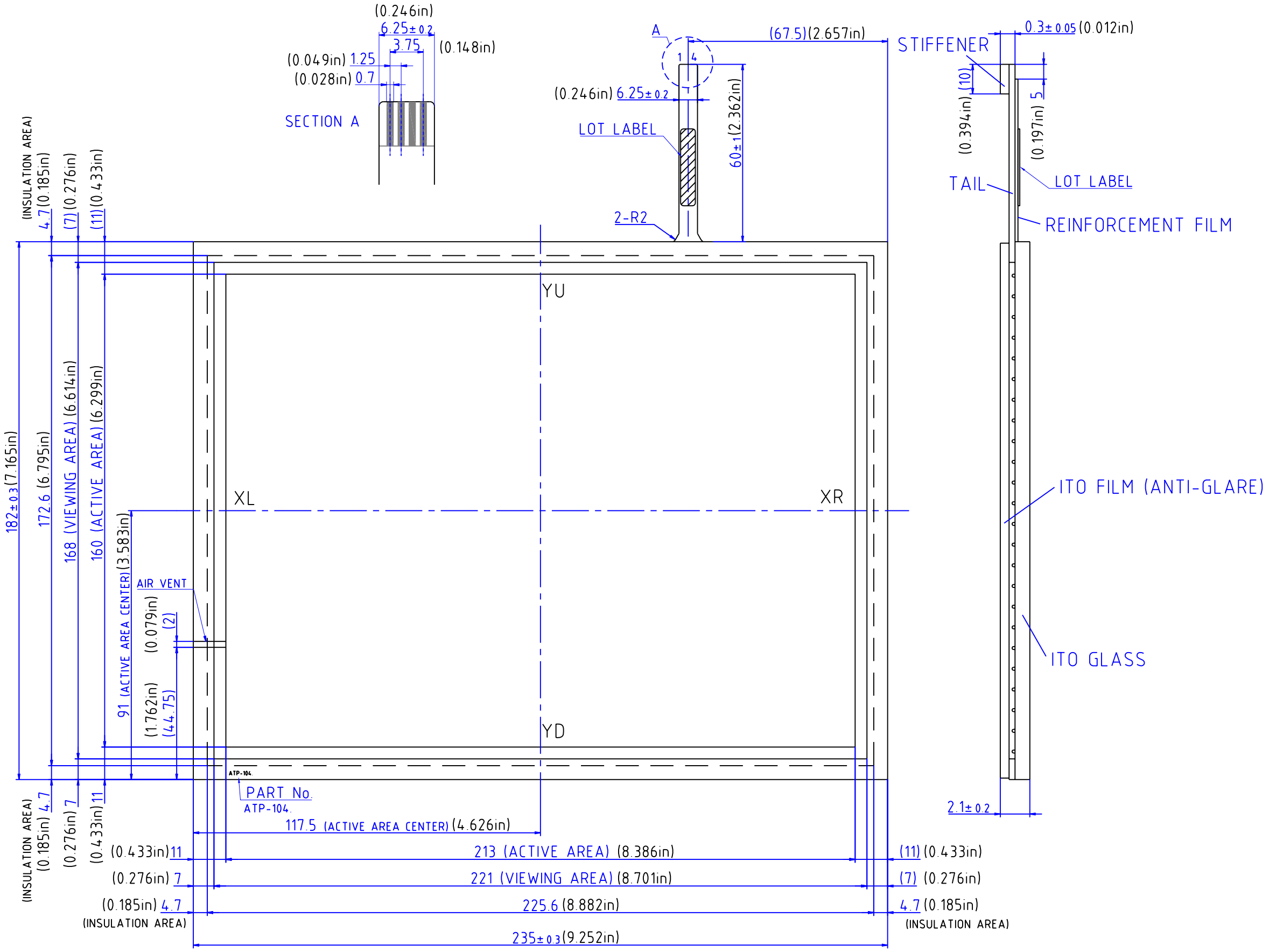


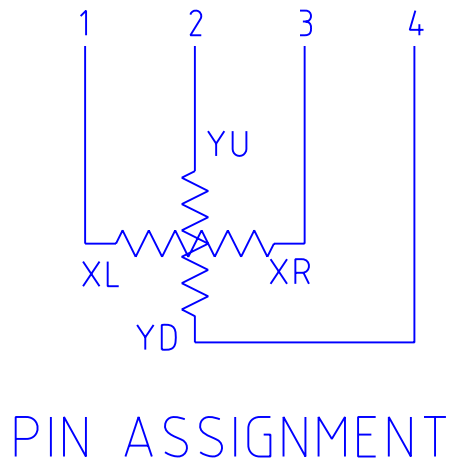


TOLERANCE = ±0.5mm(0.02in)

UNIT = mm(inch)

| PART No. | DATE |
|---|---|
| ATP-104. | December 22, 2009 |
| TYPE | |
| STANDARD TOUCHSCREEN DIMENSIONAL DRAWING | DMC Co., Ltd. |